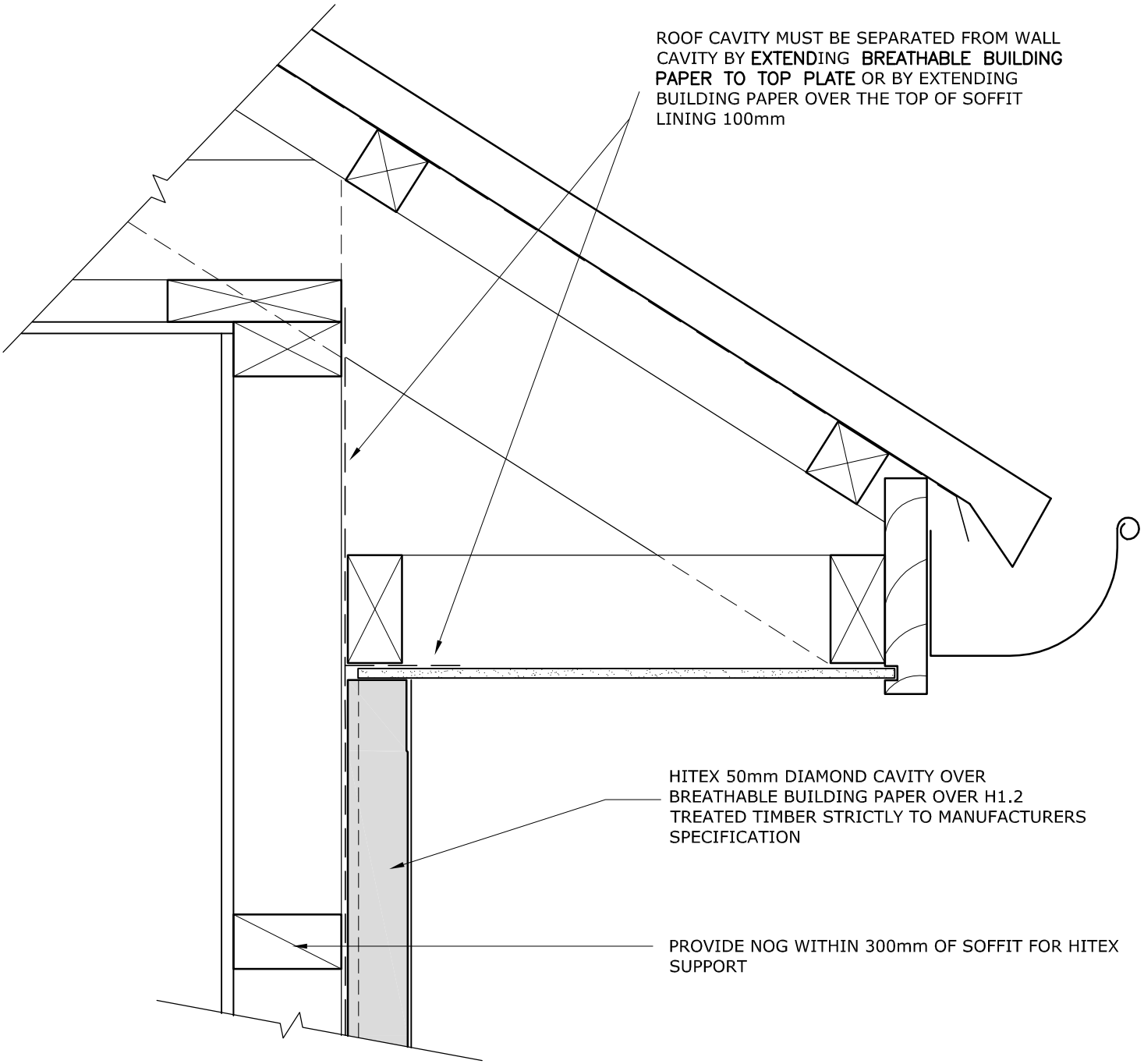

Please visit www.hitex.co.nz
for our latest drawings.

HITEX BUILDING SYSTEMS LIMITED

EAVES - SOFFIT

Not to Scale

DC50-WA-13 Ver 2